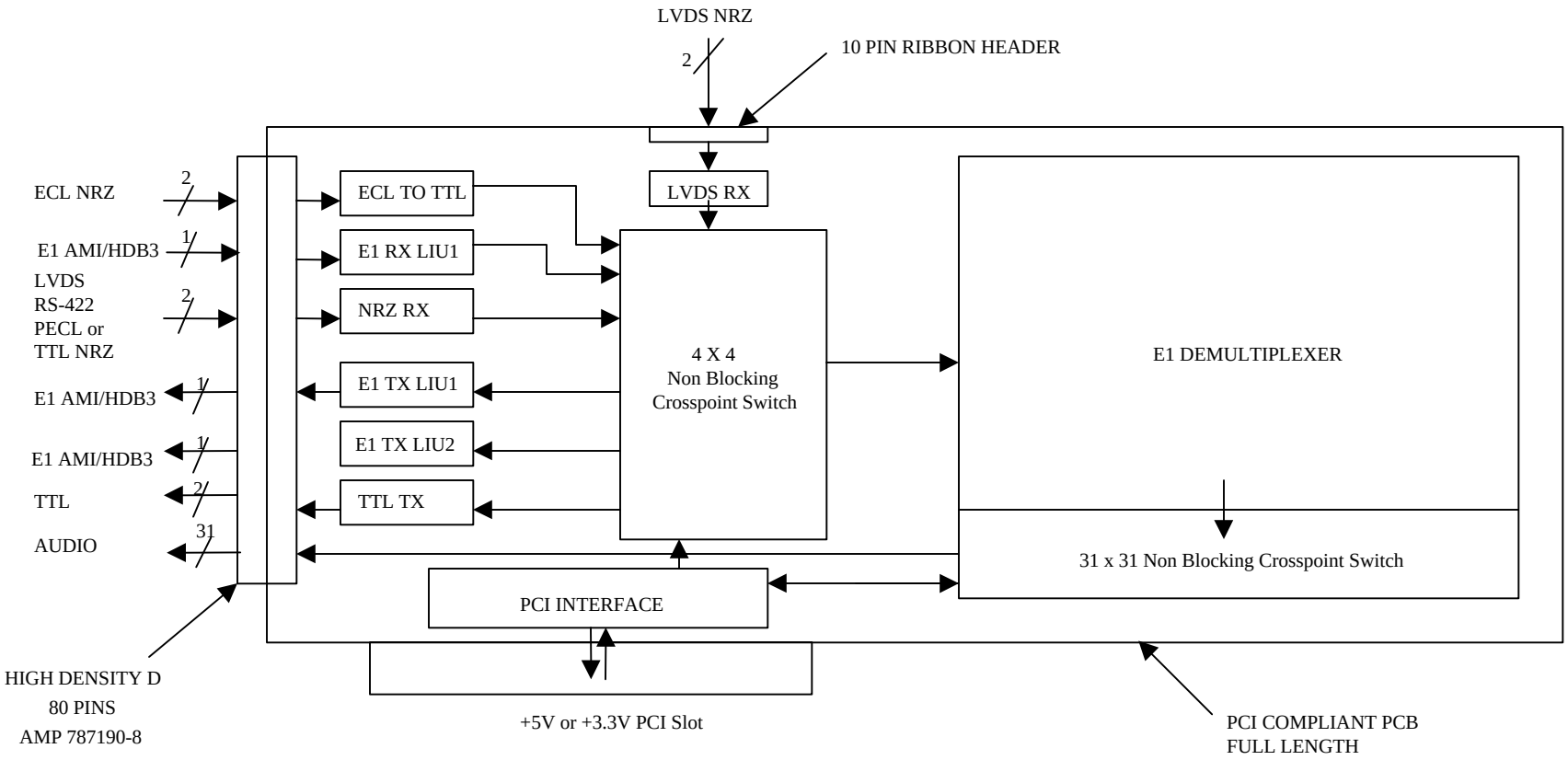

INT-9951 PCI ITU/CEPT E1 DEMULTIPLEXER

FUNCTIONAL BLOCK DIAGRAM

15 March 2001